BVV E-mail-SMS-Gateway

BVV-105 Is a small, DIN-rail mountable device, which works as a local SMTP-server i.e. e-mail server. This means, that it can receive e-mail messages locally, and relay them as text messages (SMS) through serially connected GSM-modem.



In typical usage, BVV-105 receives email message (usually alarm message) from building automation controller , converts message to SMS message, and sends it to receiver.

Receiver messages can also be relayed to smtp-server, to be delivered as emails.

Configuration and commissioning is performed through web-based user interface.

> **NOTE!** For sending SMS messages to GSM network, BVV-105 needs working GMS-modem like **Cinterion BGS2T** attached to it.



How does it work?

BVV-105 (a.k.a. Viesti-Vertti) works as local MTA (mail transfer agent), also known as **email server** . It means, that it functions as **local SMTP server**, then it identifies messages which has numerical local-part (a.k.a mailbox or username) - that is the address part before the '@'-symbol. Then it sends them as text messages (SMS). Messages with regular receiver email address it relays to configured SMTP server, and forwards as regular email messages.

Commissioning steps

Step 1: Connect cables to BVV-105:

- Ethernet cable to connect BVV-105 to same local network with devices generating messages
- Power cable for BVV-105. Power connector is 5,5mm x 2,1mm barrel plug +5 V DC with center positive contact.

- Connect USB to RS232-converter cable to BVV-105

Step 2: Connect cables to SMS-modem:

- Connect antenna cable to SMA connector.
- Connect power supply cable. Its usually +9 V DC over RJ11-modular connector.
- Connect serial cable. Connector is DB9 connector (a.k.a. RS232 serial port connector).

Step 3: Power up modem and BVV-105.

- BVV-105 has indicator lights visible through encloruse holes. You can also see blue "heart beat" light blinking from the PCB of device when the operating system is started and running. Correct beat is two quick blinks with longer 750ms pause.
- Green light in GSM modem.

Step 4: Setup IP address

You can access web UI of the BVV-105 with web browser. Default address is **http://192.168.0.128** .

- Connect your computer with cable to same LAN router with BVV-105.
- Configure your computer to 192.168.0.0/24 network. E.g. set you computers IP address as **192.168.0.129** with network mask **255.255.255.0**
- Open web browser, type or copy URL address http://192.168.0.128
- Login to device user interface with username and factory password
- Change factory password from **system/user management** -page
- If needed, change the IP address from **system/settings** -page







Step 5: Check modem settings

- Check tha

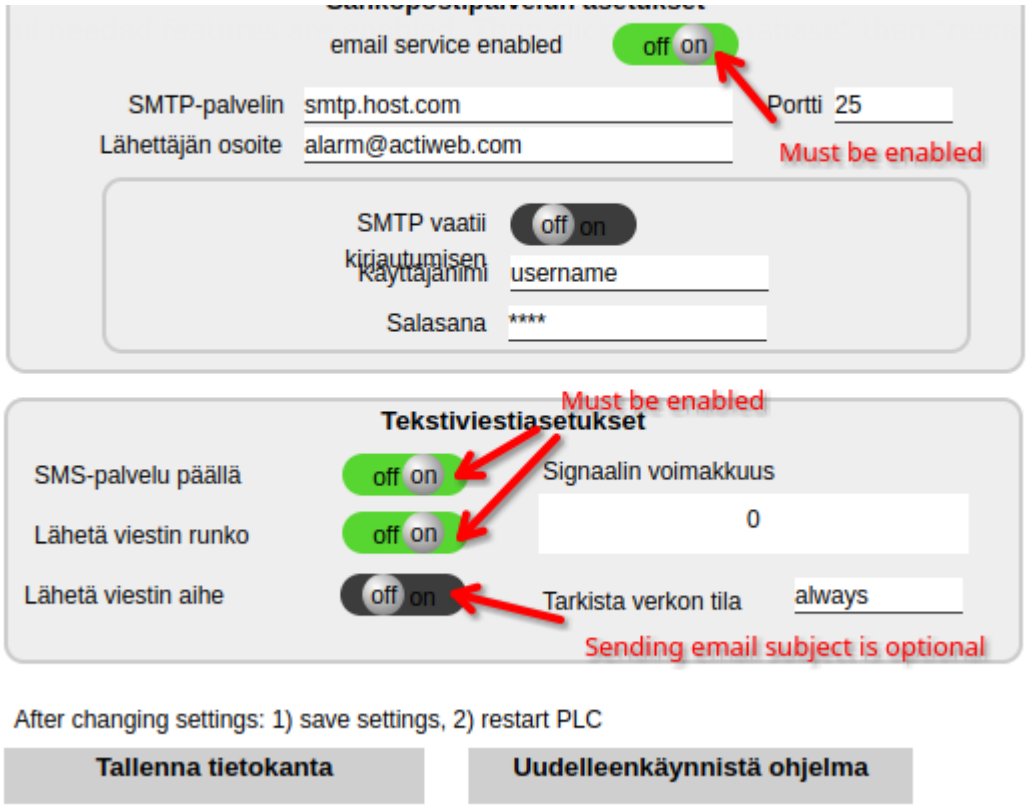

  software"

- Check baud rate

2G modem Cinterion BGS2T label, correct **baud rate is 9600**	4G/LTE modem Cinterion EGX81-W, correct **baud rate is 115200**
	

Check from modem documentation, what is the correct baud rate for serial communication. **NOTE! In images above you can see correct settings for 2 widely use SMS modem types.**

Navigate to page **system/database**, and open data point **sys/settings/smsSettings.** Check value of configuration variable "**baudrate**" and change it to match correct value from modem documentation - usually 9600 for older 2G modem, 115200 for new LTE/4G modem.

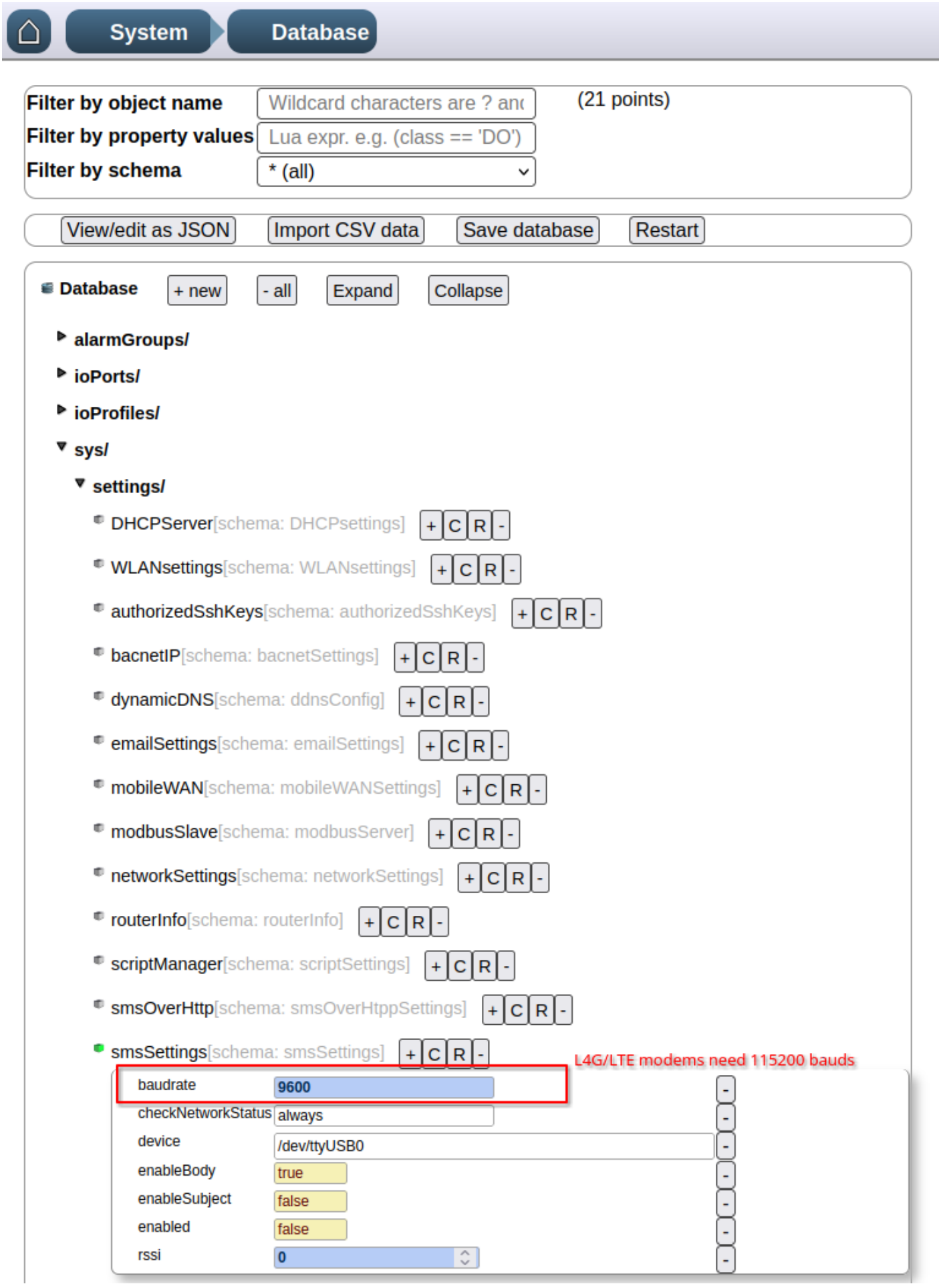
System
Database
Filter by object name
Wildcard characters are ? and
(21 points)
Filter by property values
Lua expr. e.g. (class == 'DO')
Filter by schema
* (all)
View/edit as JSON
Import CSV data
Save database
Restart
Database
+ new
- all
Expand
Collapse
alarmGroups/
ioPorts/
ioProfiles/
sys/
settings/
DHCPServer[schema: DHCPsettings]
WLANsettings[schema: WLANsettings]
authorizedSshKeys[schema: authorizedSshKeys]
bacnetIP[schema: bacnetSettings]
dynamicDNS[schema: ddnsConfig]
emailSettings[schema: emailSettings]
mobileWAN[schema: mobileWANSettings]
modbusSlave[schema: modbusServer]
networkSettings[schema: networkSettings]
routerInfo[schema: routerInfo]
scriptManager[schema: scriptSettings]
smsOverHttp[schema: smsOverHtppSettings]
smsSettings[schema: smsSettings]
L4G/LTE modems need 115200 bauds
baudrate
9600
checkNetworkStatus
always
device
/dev/ttyUSB0
enableBody
true
enableSubject
false
enabled
false
rssi
0

Then, press "**save database**" and then "**restart**" buttons

Step 6: Check system status

On home page, you should check the "SMS service log", and there should be row saying "**modem is registered to netowork**".

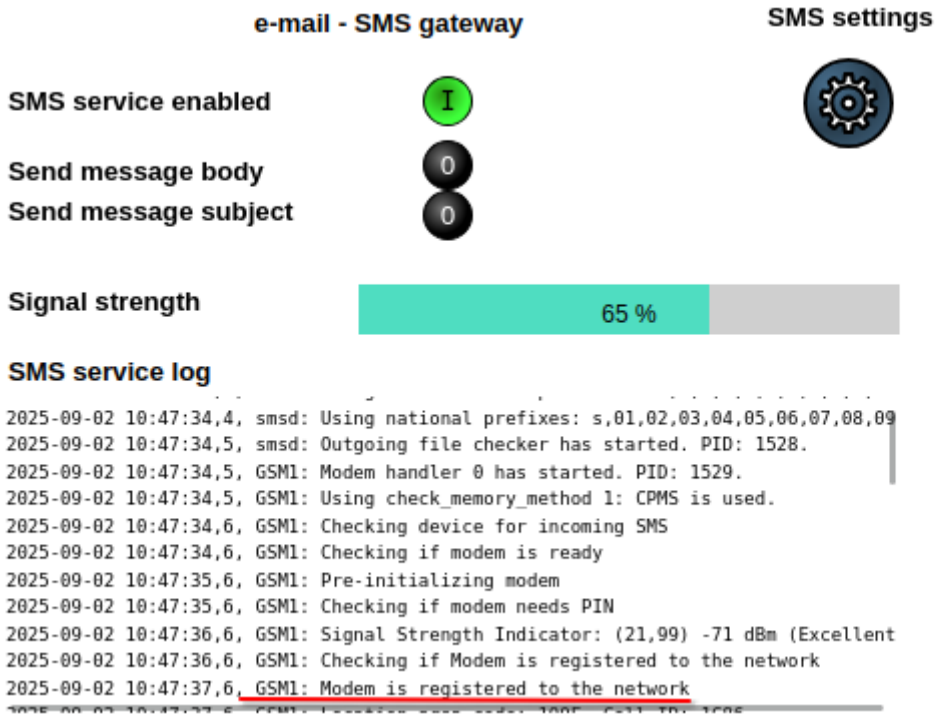

Its also possible, that you see some **error messages.** They always needs to be resolved - If needed, you can contact the manufacturer.

Device is now ready to send messages.

Cinterion BGS2T

Modem status LED (2G-modem: BGS2T)
The orange status LED of BGS2T can help with troubleshooting: Usually the SIM card (or cellular service subscription) is at fault if the LED is blinking in the Limited Network Service mode (600 ms on/600 ms off). In this case a more specific error code can be read from the SMS Daemon log (a reboot of BVV-105 may be required to show the log at the beginning).

Normally the LED should blink in the IDLE mode (75 ms on/3 s off).

Table 13: Coding of the orange status LED

LED mode	Operating status of BGS2T
Permanently off	BGS2T is in POWER DOWN mode
600 ms on / 600 ms off	Limited Network Service: No SIM card inserted or no PIN entered, or network search in progress, or ongoing user authentication, or network login in progress.
75 ms on / 3 s off	IDLE mode: The mobile is logged to the network (monitoring control channels and user interactions). No call in progress.
75 ms on / 75 ms off / 75 ms on / 3 s off	One or more GPRS contexts activated.
500 ms on / 25 ms off	Packet switched data transfer in progress.
Permanently on	Connected to remote party or exchange of parameters while setting up or disconnecting a call.

Modem status LED (4G-modem: EGX81-W)

Table 13: Coding of the orange status LED

LED mode	Operating status of EGX81-W
Permanently off	EGX81-W is in POWER DOWN mode
500 ms on / 500 ms off	Limited Network Service: No SIM card inserted or no PIN entered, or network search in progress, or ongoing user authentication, or network login in progress.
Permanently on	UE registered to a network. No call, no data transfer or GSM PS /LTE data transfer

BGS2T manual:

cinterion-bgs2t-man_1-0-0_en.pdf

Power connector pinout:

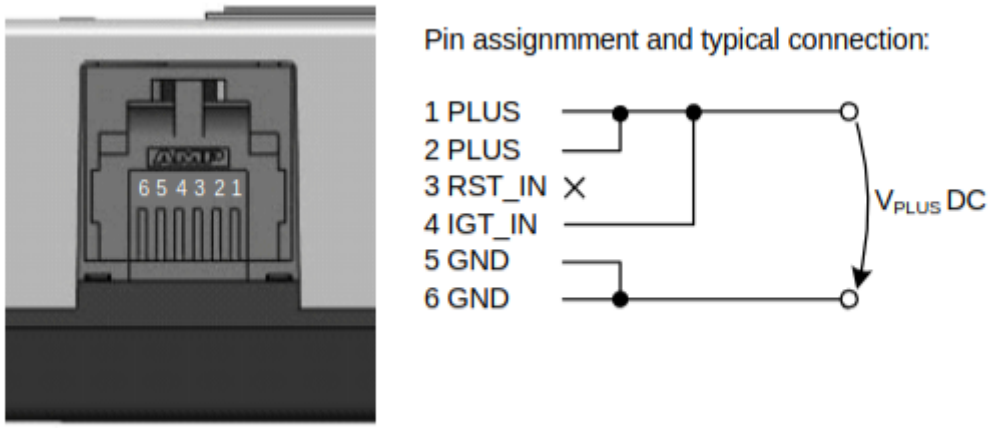

Figure 5: 6-pole Western jack for power supply, ignition, reset, typical connection

Wire colors in pig-tail style power cable:

Johdinväri	Selite
Red , White	+8 .. +30V DC
Black , Purple	Not connected
Yellow , Brown	Ground (0 V DC)

Material

Downloads:

BVV-105 commissioning 2023-02-15.pdf

BVV-105-datasheet.pdf

BVV-päivitysohje-v2.pdf

bvv-105-pikaohje.pdf

BVV105-ip-palautus-ohje-2019-11-22.pdf

Technical data	
Electrical	
Supply voltage	5 V DC
Supply current	< 500 mA
Connectors	

Ethernet	1 x 10/100 Mbps
USB	1
MicroSD	1 (max. 32GB card)
Integration	
SMTP server	
Modbus TCP/RTU	
Bacnet/IP	
Mounting	
IP rating	IP20
Enclosure material	PC / ABS plastic
Op. temperature	-40 .. 85 °C (< 95% RH)
Dimesions	72 x 91 x 63mm (W x H x D)
Weight	130 g

Revision #16
Created 15 February 2023 08:55:21 by Tommi
Updated 10 July 2026 06:33:20 by Leea